NON-NEWTONIAN COUPLE STRESS EFFECTS ON THE FRICTIONAL AND FLOW-RATE PERFORMANCES OF WIDE COMPOSITE SLIDER BEARINGS

Jaw-Ren Lin*, Tsu-Liang Chou, Hsiu-Lu Chiang, Chi-Yi Chang

Department of Mechanical Engineering
Nanya Institute of Technology
Jhongli, Taiwan

Abstract

Based upon the micro-continuum theory, the frictional and flow-rate performances of wide composite slider bearings lubricated with non-Newtonian couple stress fluids are mainly concerned. Comparing with the Newtonian-lubricant composite slider-bearing case, the effects of non-Newtonian couple stresses provide a reduction in values of the friction parameter and the volume flow rate required. These improvements on bearing characteristics are more emphasized with increasing values of the couple stress parameter. A numerical example and the predicted results are also included for engineering application.

Key Words: couple stress effects, composite bearings, frictional performance, flow rate performance.

*Email: jrlin@nanya.edu.tw Tel: 03-4361070#6302 Fax: 03-4384670

非牛頓偶應力效應對於複合形狀寬滑塊軸承摩擦與流量性能之影響

林昭仁* 周祖亮 江新祿 張志毅

南亞技術學院 機械工程系

摘要

在微連體理論之基礎下，本文主要在探討複合形狀寬滑塊軸承於使用非牛頓偶應力潤滑劑情況下之摩擦與流量性能。根據所得結果，若與使用傳統牛頓流體潤滑劑複合形狀滑塊軸承之情況比較，則非牛頓偶應力效應可以降低複合滑塊軸承之摩擦參數並減少所需供應流量。此種性能之改善，尤其在高偶應力參數值之情況下更為明顯。為能導引本研究之實務應用，本文亦提供數值實例以及計算之結果，有助於工程上之應用。

關鍵詞: 偶應力效應，複合軸承，摩擦性能，流量性能

1. Introduction

Traditionally, studies of slider bearing characteristics for different-types mechanisms concentrates upon the use of Newtonian viscous fluids by Pinkus and Sternlicht [1] and Hamrock [2]. Further studies are observed by considering various shapes of slider bearings, such as the inclined plane shape by Lin *et al.* [3], the exponential profile by Lin and Hung [4], the parabolic film by Lin *et al.* [5], the step shape by Lu *et al.* [6], and the tapered-land profile by Lin *et al.* [7]. Another consideration of inertia and turbulent effects is made by King and Taylor [8]. Owing to the developing of industry, the use of fluids blended with various kinds of additives has received a great attention. In order to describe the flow behaviors of these kinds of non-Newtonian fluids, a micro-continuum theory of couple stress fluids have been generated by Stokes [9]. This Stokes micro-continuum theory depicts the rotational field in terms of the velocity field and allows for polar effects including the presence of couple stresses, body couples and non-symmetric stress tensors. Many researchers have applied this couple stress fluid model to investigate the hydrodynamic bearing characteristics. Typical articles can be found in the squeeze-film bearings by Ramanaiah [10], Bujurke and Jayaraman [11], and Lin [12]; the partial journal bearings by Lin [13]; and the slider bearings by Lin *et al.* [14]. As stated in the above, the composite slider bearing characteristics of a Newtonian-lubricant case have been analyzed by Lin *et al.* [7]. However, we have no idea how the couple stress effects affect the performance characteristics of composite slider bearings. Therefore, a further study is motivated.

On the basis of the micro-continuum theory, the steady performances of wide composite slider bearings lubricated with non-Newtonian couple stress fluids are investigated. Comparing with the Newtonian-lubricant composite-bearing case, the effects of non-Newtonian couple stresses on the bearing characteristics including the frictional parameter and the volume flow rate are presented for various values of the couple stress parameter. A numerical example and the evaluated results are also included for engineering application.

2. Analysis

Consider the physical configuration of a wide composite slider bearing shown in Figure 1. The film thickness for this composite profile can be described by

$$h(x) = h_s(x) + h_2 \tag{1}$$

$$h_s(x) = \begin{cases} d \cdot [1 - x / L_1], & 0 \le x \le L_1 \\ 0, & L_1 \le x \le L \end{cases} \tag{2}$$

In these equations, h_2 is the minimum film thickness, and $h_1 = d + h_2$ is the inlet film thickness. Based upon the micro-continuum theory generated by Stokes [9], the velocity component u in the $x-$direction and the non-Newtonian couple-stress Reynolds-type equation for a slider bearing has been derived by Lin et al. [14]:

$$u = \left(1 - \frac{z}{h}\right)U + \frac{1}{2\mu}\frac{\partial p}{\partial x}\left\{z(z-h) + 2l^2\left\{1 - \frac{\cosh[(2z-h)/(2l)]}{\cosh[h/(2l)]}\right\}\right\} \tag{3}$$

$$\frac{\partial}{\partial x}\left\{\left[h^3 - 12l^2 h + 24l^3 \tanh\left(\frac{h}{2l}\right)\right]\frac{\partial p}{\partial x}\right\} = 6\mu U \frac{\partial h}{\partial x} \tag{4}$$

In these equations, $l = (\eta / \mu)^{1/2}$ is identified as the characteristic material length of the polar suspensions in a non-polar fluid, μ is the viscosity coefficient, and η is a new constant responsible for the non-Newtonian couple stress fluid. Introduce the non-dimensional variables and parameters:

$$x^* = \frac{x}{L},\ p^* = \frac{ph_2^2}{\mu UL},\ h^* = \frac{h}{h_2},\ h_s^* = \frac{h_s}{h_2},\ \delta = \frac{d}{h_2},\ C = \frac{l}{h_2},\ \alpha = \frac{L_2}{L} \tag{5}$$

where C is the non-dimensional couple stress parameter accounting for the couple stress effects. As a result, the non-dimensional non-Newtonian couple-stress Reynolds equation is obtained.

$$\frac{\partial}{\partial x^*}\left[f^*(h^*, C)\frac{\partial p^*}{\partial x^*}\right] = 6\frac{\partial h^*}{\partial x^*} \tag{6}$$

$$f^*(h^*, C) = h^{*3} - 12C^2 h^* + 24C^3 \tanh\left(h^* / 2C\right) \tag{7}$$

where the non-dimensional film thickness is given by:

$$h^*(x^*) = h_s^*(x^*) + 1 \tag{8}$$

$$h_s^*(x^*) = \begin{cases} \delta \cdot (1 - x^* / \alpha), & 0 \le x^* \le \alpha \\ 0, & \alpha \le x^* \le 1 \end{cases} \tag{9}$$

3. Frictional and flow-rate performances

The required volume flow rate in the $x-$direction can be calculated by integrating the velocity component u with respect to z across the film thickness.

$$Q = \int_{z=0}^{h} u \cdot B dz \tag{10}$$

where B denotes the width of the bearing. Using the expression of u and performing the integration, the volume flow rate is obtained.

$$Q = \frac{1}{2}Uh \cdot B - \frac{1}{12\mu} \cdot \frac{\partial p}{\partial x} \cdot \left[h^3 - 12l^2 \cdot h + 24l^3 \cdot \tanh\left(\frac{h}{2l}\right)\right] \cdot B \tag{11}$$

In terms of non-dimensional variables and parameters, the non-dimensional volume flow rate can be written respectively as:

$$Q^* = \frac{Q}{Uh_2 B} = \frac{1}{2}h^* - \frac{1}{12}f(h^*, C) \cdot \frac{\partial p^*}{\partial x^*} \tag{12}$$

Integrating the non-dimensional non-Newtonian couple-stress Reynolds-type equation with respect to x^* together with the boundary conditions $p^*(x^* = 0) = 0$ and $p^*(x^* = 1) = 0$, we can obtain the film pressure.

$$p^* = p_1^* + p_2^* \tag{13}$$

$$p_1^* = 6 \cdot g_A(x^*, h^*) + c_1 \cdot g_C(x^*, h^*), \quad 0 \le x^* \le \alpha \tag{14}$$

$$p_2^* = c_2 \cdot g_F(x^*, h^*), \quad \alpha \le x^* \le 1 \tag{15}$$

where c_1 and c_2 denote the integration constants, and

$$g_A(x^*, h^*) = \int_{x^*=0}^{x^*} \frac{h_s^*(x^*)}{f^*(h^*, C)} dx^* \tag{16}$$

$$g_C(x^*, h^*) = \int_0^{x^*} \frac{1}{f^*(h^*, C)} dx^* \tag{17}$$

$$g_F(x^*, h^*) = \int_{x^*=1}^{x^*} \frac{1}{f^*(h^*, C)} dx^* \tag{18}$$

By applying the continuity requirements of film pressure and volume flow rate at the position $x^* = \alpha$, the integration function can be found.

$$c_1 = c_2 = \frac{-6 \cdot g_A(\alpha, h^*)}{g_C(\alpha, h^*) - g_F(\alpha, h^*)} \tag{19}$$

The non-dimensional load carrying capacity is evaluated by integrating the film pressure over the film region.

$$W^* = \frac{Wh_2^2}{\mu UL^2 B} = \int_{x^*=0}^{1} p^* dx^* = \int_{x^*=0}^{\alpha} p_1^* dx^* + \int_{x^*=\alpha}^{1} p_2^* dx^* \tag{20}$$

Performing the integration yields:

$$W^* = 6 \cdot G_A + c_1 \cdot (G_C + G_F) \tag{21}$$

where G_A, G_C and G_F are determined by the following double integrals.

$$G_A = \int_{x^*=0}^{\alpha} g_A(x^*, h^*) dx^* \tag{22}$$

$$G_C = \int_{x^*=0}^{\alpha} g_C(x^*, h^*) dx^* \tag{23}$$

$$G_F = \int_{x^*=\alpha}^{1} g_F(x^*, h^*)dx^* \tag{24}$$

The viscous force acting on the lower-plate surfaces is:

$$\tau_{zx} = \mu\left(\frac{\partial u}{\partial z}\right) - \eta\left(\frac{\partial^3 u}{\partial z^3}\right) \tag{25}$$

Using the expression of u, we can obtain the shear force acting on the lower plate:

$$F_L = \int_{x=0}^{+L} \left\{-\frac{\mu U}{h} - \frac{1}{2}\cdot\frac{\partial p}{\partial x}\cdot h\right\} B dx \tag{26}$$

Introduce the non-dimensional quantity, we have:

$$F_L^* = \frac{F_L h_2}{\mu U L B} = \int_{x^*=0}^{+1} \left[-\frac{1}{h^*} - \frac{1}{2}\cdot\frac{\partial p^*}{\partial x^*}\cdot h^*\right] dx^* \tag{27}$$

The friction coefficient is defined as:

$$f_c = \frac{-(F_L)_s}{W_s} \tag{28}$$

The friction parameter is then obtained.

$$f_p = f_c \cdot \frac{L}{h_2} = -\frac{F_L^*}{W^*} \tag{29}$$

4. Results and discussion

Friction parameter. Figure 2 describes the variation of the composite-bearing friction parameter with the shoulder parameter δ for different values of C under $\alpha = 0.6$. Comparing with the composite-bearing Newtonian-lubricant case (NLC), the effects of non-Newtonian couple stresses ($C = 0.1$) are observed to decrease the values of the friction parameter. Increasing values of the couple stress parameter ($C = 0.2$, 0.3, 0.4 and 0.5) provides a further reduction in the friction parameter of the bearing. Figure 3 shows the variation of the composite-bearing friction parameter with the geometric parameter α for different values of C under $\delta = 1.5$. It is observed that the friction parameter decreases with increasing values of the geometric parameter. Comparing with the NLC composite bearing, the effects of non-Newtonian couple stresses ($C = 0.2$, 0.3, 0.4 and 0.5) provide further decrements of the friction parameter of the composite slider bearing.

Volume flow rate. Figure 4 presents the variation of the composite-bearing volume flow rate with the shoulder parameter δ for different values of C under $\alpha = 0.6$. Comparing with the NLC composite bearing, it is observed that the effects of

non-Newtonian couple stresses ($C = 0.1$) decrease the required volume flow rate for the composite bearing especially with larger shoulder parameters. Increasing values of the couple stress parameter ($C = 0.2$, 0.3, 0.4 and 0.5) decreases further the volume flow rates for the slider bearing. Figure 5 shows the variation of the composite-bearing volume flow rate with the geometric parameter α for different values of C under $\delta = 1.5$. It is observed that the required volume flow rate increase with increasing values of the geometric parameter. Comparing with the NLC composite bearing, the effects of non-Newtonian couple stresses ($C = 0.2$, 0.3, 0.4 and 0.5) provide further reductions of the flow rates for the composite bearing.

Numerical example and comparison. In order to illustrate the use of the present study, a numerical example is guided. Modified from the data of Lin *et al.* [15] and Lin *et al.* [16], we consider the data of the composite slider bearing lubricated with non-Newtonian couple stress fluids as follows: the length of the first part $L_1 = 0.80 \times 10^{-1} m$, the length of the bearing $L = 1.00 \times 10^{-1} m$, the inlet-outlet film thickness differences $\delta = (2.00, 4.00, 6.00, 8.00, 10.00) \times 10^{-4} m$, the steady minimum film thickness $h_2 = 4.00 \times 10^{-4} m$, the lubricant viscosity $\mu = 2.00 \times 10^{-6} Pa \cdot s$, the couple-stress material constants $\eta = (0, 0.32, 1.28, 2.88, 5.12, 8.00) \times 10^{-14} N \cdot s$. According to the definitions of the parameters, we can calculate the geometric parameter α, the shoulder parameter δ and the couple stress parameter C: $\alpha = 0.8$; $\delta = 0.5, 1.0, 1.5, 2.0, 2.5$; $C = 0, 0.1, 0.2, 0.3, 0.4, 0.5$; in accordance with the above equations obtained, the friction parameter and the volume flow rate of the composite slider bearing are calculated and presented in Table 1. In addition, the results of the NLC composite bearing by Lin *et al.* [7] are also included in Table 1 for comparison. It is observed that for the non-Newtonian couple stress parameter $C = 0$, the present calculated results are close to the NLC composite bearing by Lin *et al.* [7].

5. Conclusions

Based upon of the Stokes micro-continuum theory, the effects of non-Newtonian couple stresses upon the steady performances of composite slider bearings have been investigated. From the results and discussed, we can draw the conclusions as follows.

A closed-form solution of the non-Newtonian steady friction parameter and volume flow rate is obtained for the composite slider bearing. Comparing with the Newtonian-lubricant composite-bearing case, the effects of non-Newtonian couple

stresses provides a significant reduction in friction parameter and the required volume flow rate for the composite slider bearing. A numerical example and the predicted results are also included for engineering application.

References

1. Pinkus, O., and Sternlicht, B., Theory of Hydrodynamic Lubrication, McGraw Hill, New York (1961).
2. Hamrock, B.J., Fundamentals of Fluid Film Lubrication, McGraw-Hill, New York (1994).
3. Lin, J.R., Lu, R.F., and Yang, C.B., "Linear Stability Analysis of a Wide Inclined Plane Slider Bearing," Journal of Science and Technology, Vol. 10, pp. 349-354 (2001).
4. Lin, J.R. and Hung, C.R., "Analysis of Dynamic Characteristics for Wide Slider Bearings with an Exponential Film Profile," Journal of Marine Science and Technology, Vol. 12, pp. 217-221 (2004).
5. Lin, J.R., Lu, R.F, and Chien, R.D., "Steady and Dynamic Characteristics for a Wide Parabolic Slider Bearings," Proceedings of 2004 Conference on the Tribology and Material Science, Huwei Institute of Technology, pp. 128-133 (2004).
6. Lu, R.F., Ho., M.H., and Lin, J.R., "A Study of Steady-state Performance and Dynamic Characteristics for Wide Rayleigh Step Slider Bearings," Journal of Science and Technology, Vol. 14, No. 13, pp. 205-211 (2005).
7. Lin, J.R., Lu, R.F., Ho, M.H., and Lin, M.C., "Dynamic Characteristics of Wide Tapered-land Slider Bearings," Journal of the Chinese Institute of Engineers, Vol. 29, pp. 543-548 (2006).
8. King, K.F., and Taylor, C.M., "An Estimation of the Effect Fluid Inertia on the Performance of the Plane Inclined Slider Thrust Bearing with Particular Regard to Turbulent Lubrication," ASME J. Lubrication Technology, Vol. 99, pp. 129-135 (1977).
9. Stokes, V.K., "Couple Stresses in Fluids," Physics of Fluids, Vol. 9, pp. 1709-1715 (1966).
10. Ramanaish, G., "Squeeze Films between Finite Plates Lubricated by Fluids with Couple Stress," Wear, Vol. 54, pp. 315-320 (1979).
11. Bujurke, N.M., and Jayaraman, G., "The Influence of Couple Stresses in Squeeze Films," International Journal of Mechanical Science, Vol. 24, pp. 369-376 (1982).

12. Lin, J.R., "Effects of Couple Stresses and Convective Inertia Forces in Parallel Circular Squeeze-film Plates," Industrial Lubrication and Tribology, Vol. 56, pp. 318-323 (2004).
13. Lin, J.R., "Squeeze Film Characteristics of Finite Partial Journal Bearings: Couple Stress Fluid Model," Tribolology International, Vol. 31, pp. 201-207 (1998).
14. Lin, J.R., Lu, R.F., and Chang, T.B., "Derivation of Dynamic Couple-stress Reynolds Equation of Sliding-squeezing Surfaces and Numerical Solution of Plane Inclined Slider Bearings," Tribology International, Vol. 36, pp. 679-685 (2003).
15. Lin, J.R., and Hung, C.R., "Combined effects of Non-Newtonian Rheology and Rotational Inertia on the Squeeze Film Characteristics of Parallel Circular Disks", *Proc. IMechE, Part J: J. Engineering Tribolog*, Vol. 222, pp. 629-636 (2008).
16. Lin, J.R., Hung, C.R., Hsu, C.H., and Lai C., "Dynamic Stiffness and Damping Characteristics of One-dimensional Magneto-hydrodynamic Inclined-plane Slider Bearings", *Proc. IMechE, Part J: J. Engineering Tribolog*, Vol. 223, pp. 211-219 (2009).

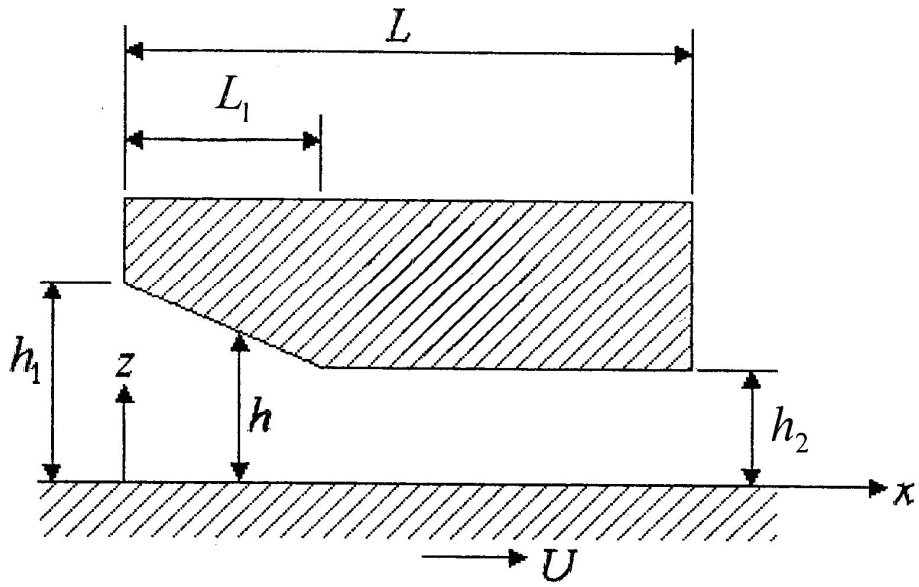

Figure 1 Physical geometry of a wide composite slider bearing lubricated with a non-Newtonian couple stress fluid.

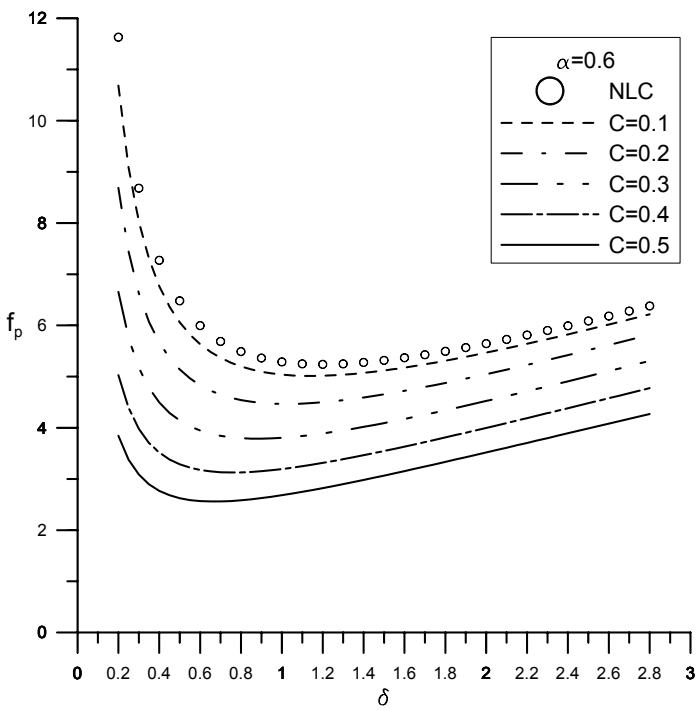

Figure 2 Variation of the composite-bearing friction parameter f_p with δ for different C under $\alpha = 0.6$

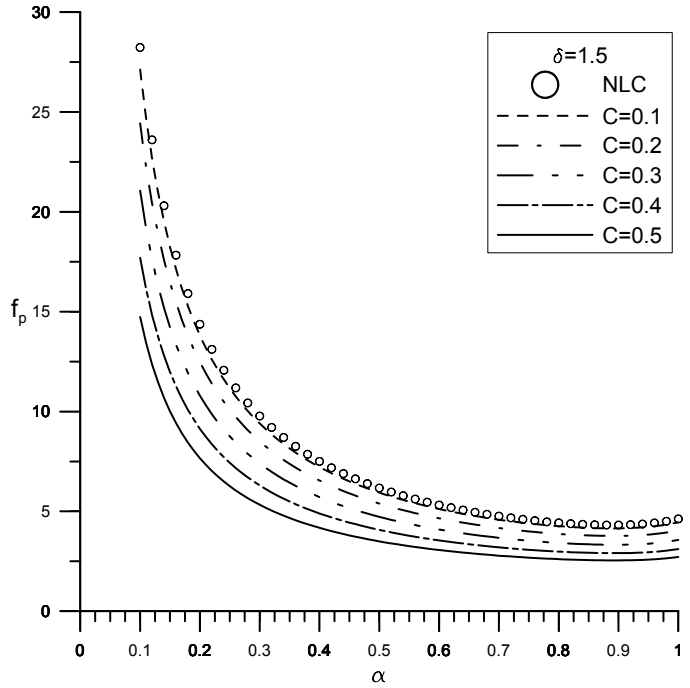

Figure 3 Variation of the composite-bearing friction parameter f_{p} with α for different C under $\delta = 1.5$

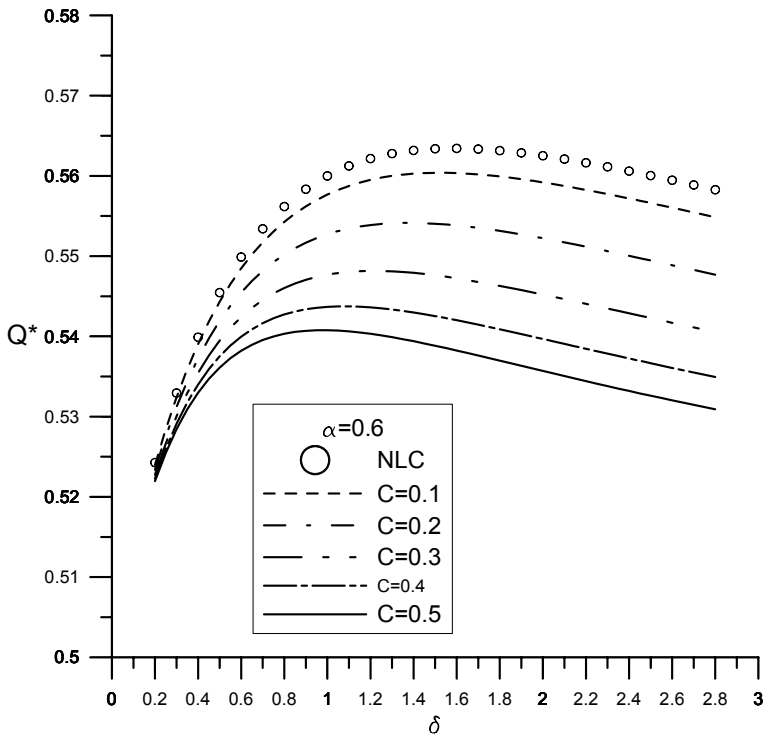

Figure 4 Variation of the composite-bearing volume flow rate Q^* with δ for different C under $\alpha = 0.6$

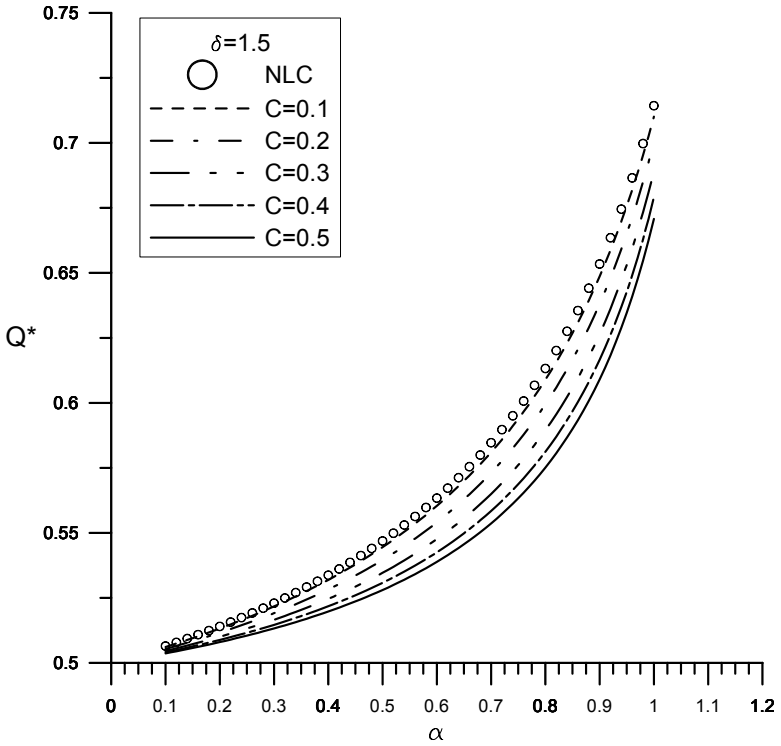

Figure 5 Variation of the composite-bearing volume flow rate Q^* with α for different C under $\delta = 1.5$

Table 1 Non-Newtonian-fluid composite-bearing performances f_p, Q^* and comparison with the NLC composite bearing by Lin *et al.* [7]

α =0.8	δ	NLC	C =0	C =0.1	C =0.2	C =0.3	C =0.4	C =0.5
f_p	0.5	5.809	5.809467	5.426507	4.588661	3.689440	2.926619	2.338356
	1.0	4.524	4.523649	4.305109	3.810290	3.247510	2.734909	2.310825
	1.5	4.424	4.423993	4.257043	3.871433	3.417205	2.983873	2.607173
	2.0	4.618	4.617514	4.474194	4.138627	3.733619	3.334394	2.974601
	2.5	4.926	4.925560	4.794655	4.484973	4.104231	3.719564	3.363312
Q^*	0.5	.569	.568965	.567666	.564850	.561904	.559510	.557743
	1.0	.600	.600001	.596952	.590305	.583266	.577469	.573143
	1.5	.613	.613215	.608867	.599415	.589433	.581225	.575104
	2.0	.618	.617681	.612492	.601267	.589491	.579857	.572701
	2.5	.618	.617744	.612055	.599809	.587051	.576675	.569002